GRACE Education Curriculum Gravity	
Teachers	Grades 9-12
Physics; IPC	

Finding Your Center of Mass

Background Information: The term gravity is used to describe the force of gravitation on an object on or near the surface of the celestial body, such as the earth. This force pulls on all mass. All mass exerts a gravitational force, from the smallest subatomic particle to the largest star. When the mass is greater, the force of gravity is also greater. Center of mass is a point in the object where the mass seems to be concentrated. This point can be in the physical object or some point outside the object. In a round object with equally distributed mass, the center of the sphere is the center of the mass. To find the center of mass for an irregular object we would have to do more work.

Objectives: To find the center of mass for an irregular shaped object and a person.

Standards: Science:
Unifying Concepts & Processes – Evidence, Models, Explanation
Science as Inquiry – Understanding about Science as Inquiry
Physical Science – Conservation of Energy and Increase in Disorder

Vocabulary: newtons, gravity, center of mass, weight

Materials:
- coat hanger with paper covering the bottom part (like those from a dry cleaner's)
- weight (such as fishing weight)
- 8'x 2"x 12" board
- 2 large triangular supports (such as machine-shop files)
- String
- 2 bathroom scales
- meter stick
- old books or wood blocks

Directions to the Teacher:

- Reinforce the fact the scales may read in pounds or kilograms, but weight in the metric system is correctly recorded in newtons.
- Discuss with the students, prior to this lab, the difference between acceleration due to gravity and the gravitational force.
- If you do not want to have the students find their own center of mass in parts 2-8, you may substitute a large doll to do the same thing. It would help if the doll were at least 40-kg or more. Or you may wish to scale the whole thing down and use a 16" fashion doll.

Procedure:

1. Tie a string to the weight. Hold the end of the string and balance the hook of the hanger on your finger. Let the hanging mass pull the string straight down. Draw a line on the paper along the string. Balance the hanger from a corner with the string. Again, allow the mass to hang down and trace a line along the string. Now balance the other corner while holding the string and repeat the tracing. The point where all three lines intersect is the center of mass for the hanger.
   - Describe where the center of mass is.
   - Describe how to find the center of mass for other irregular objects.

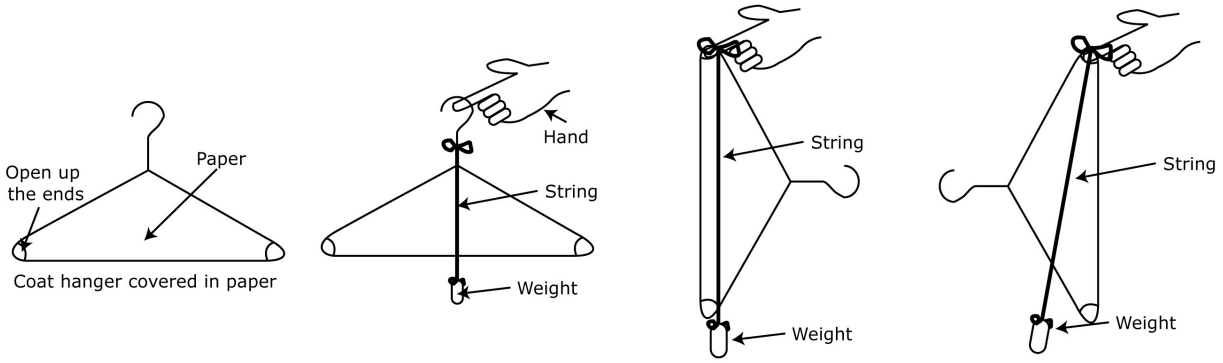

2. Using a bathroom scale, weigh yourself (or the doll) and then the board. Change the pounds to newtons if you are not using a newton scale. *Foot-pounds x 1.3830 = Newton-meters*

Weight of self or doll _____ Weight of board_____

3. Measure height of self or doll in centimeters. Height_____

4. Place one triangular support on each of the bathroom scales. You may have to put wood blocks or books on the scales to get the supports to sit flat without rocking. Position the scales so that a long board separates the tops of the triangular supports. Place the board over the supports so that equal distance is off both ends and the scales read the same weight (each scale should read half of the weight of the board). Adjust as needed.

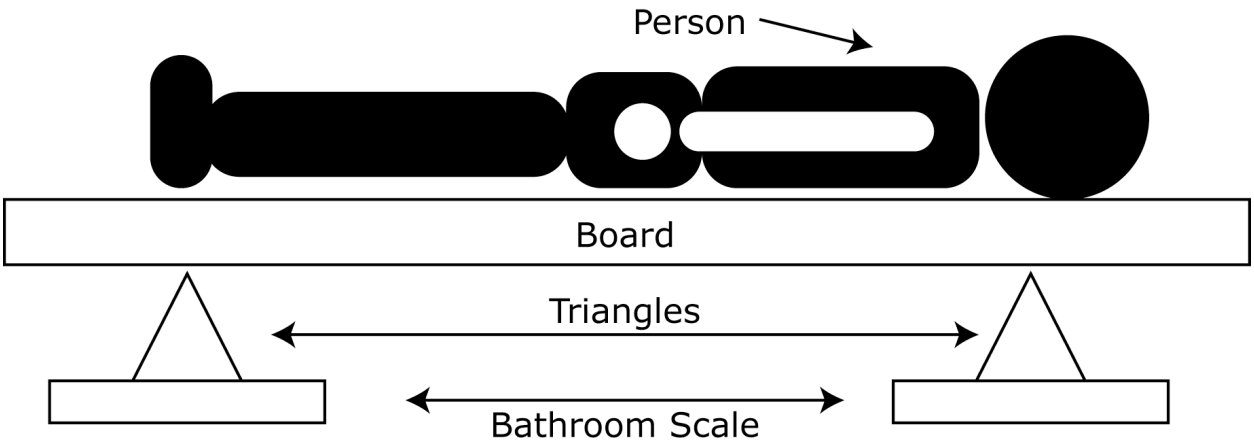

5. Lie down on the board so that you are between the two supports. Have someone assist you so that you don't upset the setup as you lay down. Lay flat on the board with your hands as your sides. Have someone else read the scales.
   Weight at head _____ Weight at feet_____
6. While still lying flat have someone read the scales, carefully move your position along the length of the board until the two readings are equal. How far are the bottoms of your feet from the support nearest to them?
   Distance from support to feet is_____centimeters
   - Did you have to move toward the foot end or toward the head end?
- When the readings on the scales were the same, where was your center of mass in relation to the supports?
7. Determine the location of your center of mass, in relation to the bottoms of your feet.
   Location of center of mass is _____centimeters from the feet.
8. Place your finger on your navel and have someone measure the distance from the bottom of your feet to your navel.
   Location of navel is _____centimeters from the feet.

Analysis:

- How close is your center of mass to your navel?
- Did the location of your center of mass make any difference if you are male or female?
- What would happen if the two weight readings of the board were not equal at both ends?
- When an astronaut spins when doing acrobatic stunts aboard an orbiting space vehicle, what point does the body spin about?

For the teacher: The answers to the questions will vary with each student. Please be sensitive to age, sex, and body shape of the person. Be careful not to call attention to an individual. It is okay to note that when younger the center of mass is almost the same between girls and boys. As boys and girls mature, the female center of mass is close to the naval while the male's center of mass is higher. If the weights were not equal at both ends then the center of mass could not be determined using this method. If an astronaut goes into a tuck spin in microgravity, he/she will rotate around their center of mass.

Evaluation:

Did the students complete the assignment and record data?

Have students complete the Analysis section of the activity. Did they answer questions appropriately so they have an understanding of the concept?

Extensions:

- Find the center of mass of various objects.
- Write a paper titled "The Importance of Finding an Object's Center of Mass."

References / Resources

Paul Hewitt's Conceptual Physics video "Center of Gravity"