GRACE Education Curriculum Gravity	
Teachers	Grades 9-12
IPC Physics	

Simulation of Remote Sensing Gravity Fields

Background Information: The term, gravity, is used to describe the force of the gravitational pull on an object on or near the surface of a celestial body, such as the Earth. This force pulls on all mass. All mass exerts a gravitational force, from the smallest subatomic particle to the largest star. When the mass is greater, so is the force of gravity. Center of mass is a point in the object where the mass or weight seems to be concentrated. This point can be in the physical object, or some point outside the object.

The primary gravity measurement is made by recording changes in the speed and distance between the two GRACE satellites. The two satellites fly in formation over the Earth and the precise speed of each satellite and the distance between them is constantly communicated via a microwave K-band ranging instrument. As the gravitational field changes beneath the satellites – correlating to changes in mass of the surface beneath – the orbital motion of each satellite is changed. This change in orbital motion causes the distance between the satellites to expand or contract and will be measured using the K-band instrument. From this, the fluctuations in the Earth's gravitational field can be determined.

Objectives: Students will perform activities to demonstrate how a satellite might detect a change in the Earth's force of gravity.

Standards: Science: unifying concepts & processes; physical science; earth & space science; science as inquiry

Vocabulary:

Newtons	Gravity	Center of mass
Weight	K-band	Gravity Field
Magnetic Field		

Materials: Teacher made board: [See "To the Teacher" section below]

For each group:

5-20 magnets of varying strengths	magnetic wand
card board or foam board (size depends on area	spring scale
grid or graph paper marked in 5 cm squares)	two ring stands
	rod
	2 clamps

Directions to the Teacher:

View the diagram below representing a model of how the two GRACE satellites will operate. Discuss with students:

- Scales may read in pounds or kilograms but weight in the metric system is correctly recorded in Newtons.
- The difference between acceleration due to gravity and the gravitational force.
- Difference between gravity field and magnetic field.
- Why models are used in science.

1. Set up two ring stands. The spring scale will be free to slide on the rod. Set up the two ring stands with the rod suspended between the two ring stands. Attach each end of the rod to a ring stand so it is suspended between the two ring stands. Attach the spring scale from the rod so the scale slides freely on the rod. Attach the magnetic wand to the spring scale and adjust the height so that the scales and wand hang freely. Record the starting weight in Newtons.
2. Tape the grid of graph paper to the top of the card or foam board.
3. On the desktop, between the ring stands, place 5 to 20 magnets of varying strengths, randomly in a space slightly smaller than the size of the foam board.
4. Place the card or foam board on top of the magnets and tape all around the sides.
5. Distribute graph paper to each student the same size of the card or foam board.
6. Slowly slide the spring scale/magnetic wand over each column of the graph paper and have students record what happens to the spring scale in each grid. Move the ring stand so the scale/magnetic wand will cover the next column of the foam board. Continue until the entire board has been mapped.

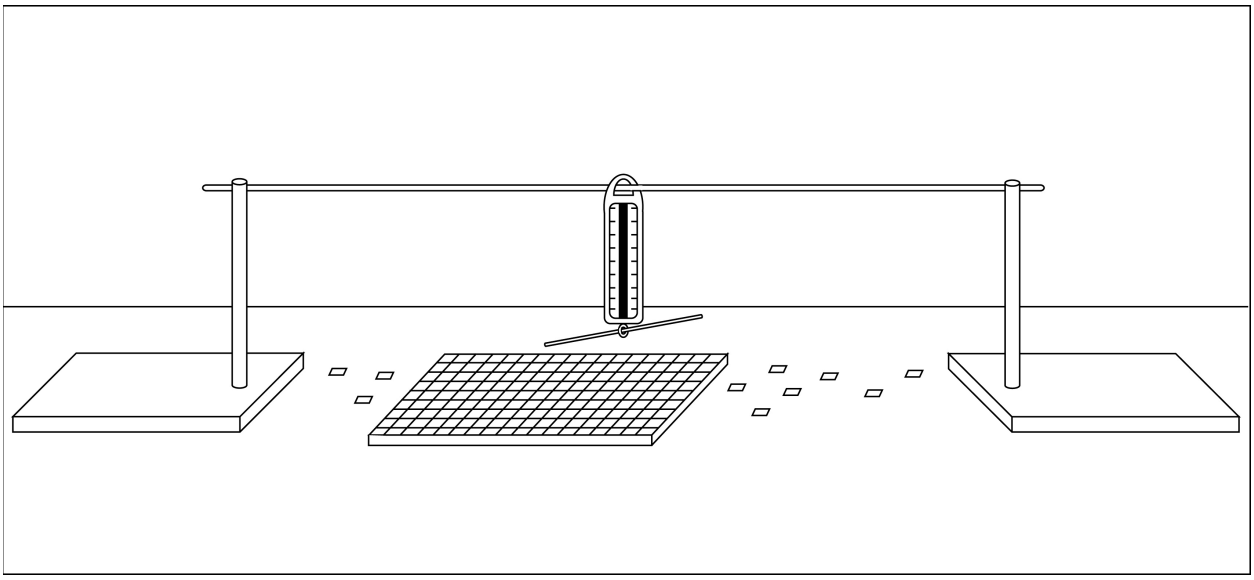

Questions:

- What was the starting weight in Newtons? This represents the mass with standard gravity.
- For each grid reading that is different from the starting weight, subtract this standard gravity reading. Divide this number by the starting weight. This represents the percent change in gravity. Negative values will represent less gravity than the standard. Positive values show an increase in gravity.
- Where does the model's gravity increase? Decrease?
- On Earth, what types of things might account for an increase or decrease in gravity?

GRACE will obtain a gravity field map by looking at how the Earth's mass varies from place to place on the surface as the twin satellites pass over. Mass and gravity are positively correlated – that is to say an increase in mass relates to an increase in the gravitational force exerted. Mass is also related to the density and amount of materials located in any one place.

Extensions:

- Using four equal sized containers, fill the first with rocks, second with water, third with plastic bag of air, and fourth with sand. Weigh each container and record the weight. Questions/Analysis: Which container weighed the most? Which weighed the least? Based on the demonstrations would you expect the Earth's gravitational pull to

be constant? Describe geographic features on earth that will cause GRACE to detect changes in gravity.

References / Resources:

http://www.essp.gsfc.nasa.gov

http://www.csr.utexas.edu/grace

http://www.geol.lsu.edu/rkd_dir/1001Lect17.html

Procedure II:

1. Using four containers the same size, fill one each with: rocks, water, plastic bag with air, and sand.
2. Weigh each container and record the weight.

Questions:

- Which container weighed the most? The least?
- Based on the demonstrations would you expect the Earth's gravitational pull to be constant?
- Describe geographic features on earth that will cause GRACE to detect changes in gravity.

Directions to the Teacher:

Prior to lab, discuss with students:

- the fact the scales may read in pounds or kilograms but weight in the metric system is correctly recorded in Newtons.
- the difference between acceleration due to gravity and the gravitational force.
- the difference between gravity field and magnetic field.
- why models are used in science.

Prior to lab, assemble teacher-made board [see materials]:

- **Teacher-made Board:** Before the lab cut the board into 10-cm by 30-cm pieces. Glue grid paper on top marked into 5-cm squares. Glue various strength magnets on the back of the board. You might want to tape of glue another board underneath so that the students can not tell where the magnets are.

Suggested Reference Materials / Resources

For more information on GRACE, visit :

- http://www.csr.utexas.edu/grace/
- http://geodesy.eng.ohio-state.edu/